DRIVE TRAIN, CLUTCH COVER, INNER/OUTER - Z26S4D92AN/AH/BN/BH (C750246)

2026 RZR - RZR PRO S4 ULTIMATE (R01) - Z26S4D92AN/AH/BN/BH

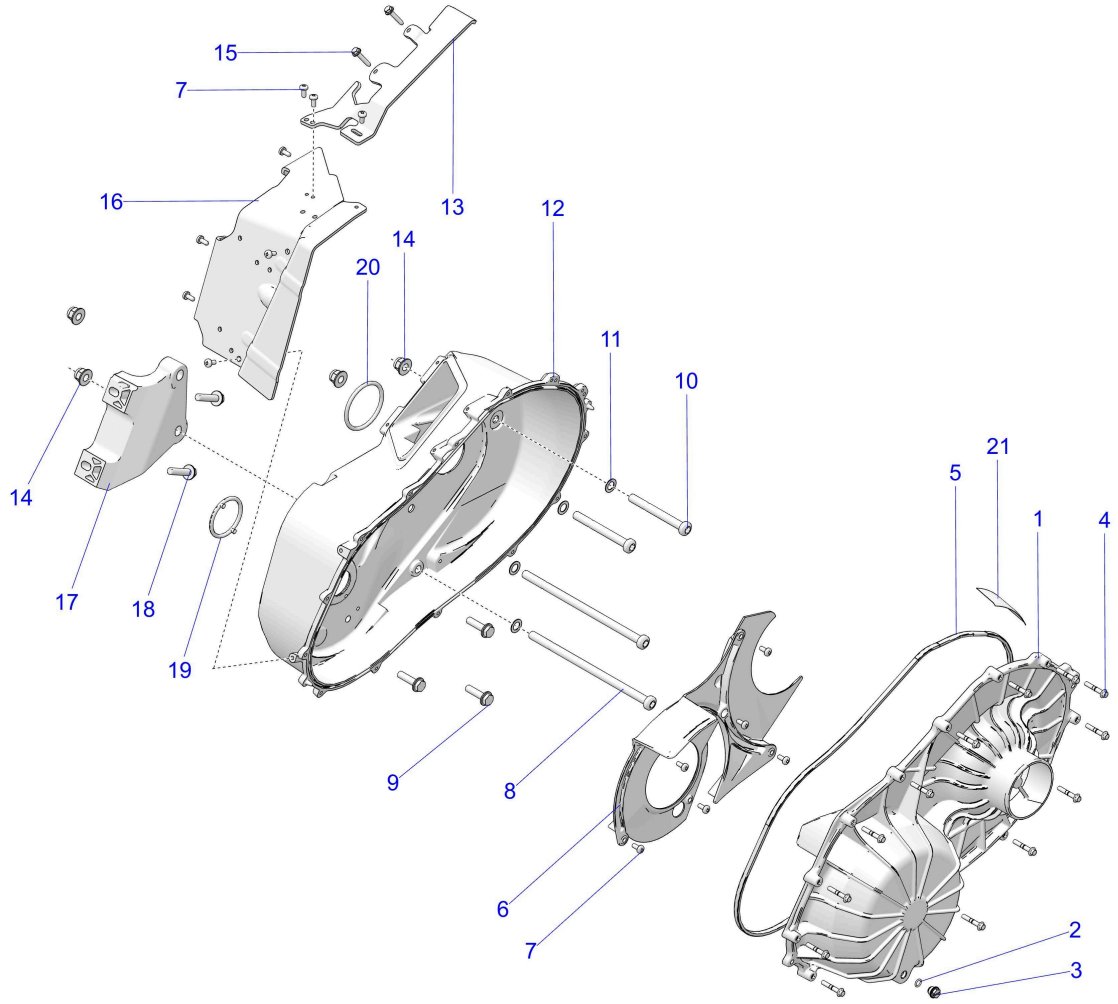

© 2023 Polaris Industries Inc.

C750246

Reference #	*Part#*	*Description*	*Quantity*
1	2637740	ASM-COVER,CLUTCH,OUTER [INCL. 2-4]	1
2	5410542	O RING-.364X.504X.07	1
3	5434264	PLUG-DRAIN,CLUTCH COVER	1
4	7521195	SCR-HXFL-M6X2.0X38 SPC	14
5	5526344	SEAL-CLTCH CVR,SILICONE FOAM	1
6	5457973	BAFFLE-INNER COVER	1
7	7518914	SCREW-M6X1X14,PN/TX,TRI-LOB	14
8	7520946	SCR-TXBH-M12X1.75X245 8.8 SPC	2
9	7521294	SCR-HHSEMS-M10X1.5X40 10.9 SPC	3
10	7520945	SCR-TXBH-M12X1.75X110 8.8 SPC	2
11	7555919	WASHER-.510X.840X.031 Y	4
12	5144959	COVER-CLUTCH,INNER,MACH	1
13	1028017	WELD-CONTAINMENT,SHIELD	1
14	7547441	NUT-HXFL M12X1.75 8 ZOD NYL	4
15	7519344	BOLT-HXFL-M6X1.0X30 RIE TAPR	2
16	5273401	BRKT-GUARD,CLUTCH COVER	1
17	5144809	BRKT-TRANSJOINT,MAG,MACH	1
18	7518531	SCR-HXFL-M10X1.5X1.5 8.8 ZY3	2

19	5417662	O-RING-2.25X2.625X.21,NBR,BARB	1
20	5415647	O-RING-0.489X0.629X0.070,EPDM	1
21	7177469	DECAL-BELT,WARNING/CHECK	1

Copyright 1996-2026 Polaris Industries U.S.A All rights reserved.